INSTRUMENTATION AND MEASUREMENT TECHNOLOGY

GARY B. JOHNSON
POWER ENGINEERING RESEARCH

I EMF MEASUREMENT: INSTRUMENTATION

The measurement of any quantity is defined and limited by the capabilities of the instrumentation used to make the measurement. Often instrumentation systems developed to measure an event are determined by interest in characteristics of the event. The latter has been the case with magnetic-field meters (magnetic flux density meters) used to measure power-frequency magnetic fields.

Research has identified three specific and three general field characteristics, describing how the magnetic field behaves in time or space, as interesting for health assessment studies.

They are:

Magnitude	Spatial Attentuation
Frequency	Intermittency
Polarization/orientation	Transients

Field Magnitude is the intensity or strength of the field. It is the most commonly measured characteristic of magnetic and electric fields.

Field Frequency is the fundamental frequency of the measured field. The magnitude and frequency of the field are often measured.

Field Polarization and Orientation is a spatial characteristic of the vector magnitude of the field as a function of time.

Spatial Attenuation of the Field indicates how the field decreases with distance from the field source. It depends on the geometry of the source.

Field Intermittency is an indication of how often the field magnitude, usually averaged over several cycles, changes levels.

Transient Fields are non-periodic changes in field magnitude, usually characterized by a damped oscillation at a frequency greater than the fundamental frequency of the field source.

The interest in measurement of fields associated with power frequency systems has produced a variety of instruments available to measure certain characteristics of magnetic and electric fields at power-system frequencies and other related frequencies. As the number and variety of these instruments have grown, general guidelines and standards have been developed in an effort to provide common measurement methods and instrumentation performance [1,2,3,4].

II MEASUREMENT TECHNOLOGY

Magnetic Field

Most AC magnetic-field meters are essentially shielded loops of wire connected to a current meter, as illustrated in Figure 1. The size of the coil, number of turns in the coil, amplifiers, filters, and integrating electronics set the frequency response and field sensitivity of the meter.

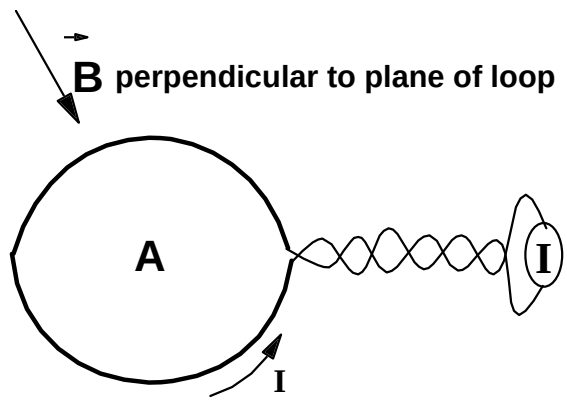

Figure 1. Simple magnetic-field meter.

Increasing the size of the coil or using a ferromagnetic core in the coil, instead of air, will increase the sensitivity of the coil to the field. The measured field is the actual field integrated over the area of the loop and normal to it. Thus if the field is non-uniform and changes rapidly with distance over the area of the coil, a small coil is desired. A small coil area decreases sensitivity, a change usually countered by increasing the number of turns or adding a ferromagnetic core. However, these modifications result in an increase in the inductance of the coil, which in turn limits the upper frequency response of the coil. This is usually not a concern for most survey meters where the instrument frequency range is below 1 kHz.

Small coils are generally desirable in personal exposure meters and for most three-axis survey meters, because they can be placed in close proximity to each other. This allows simultaneous measurement of the magnetic field along three orthogonal axes in approximately the same location, thus providing the total magnetic field. Larger-diameter coils (10 cm or more in diameter) are useful for single-axis survey meters used to search for magnetic-field sources such as current on metallic pipes or net current on conductors.

The frequency response of a magnetic-field meter can have an impact on the measurements if there are fields

present at frequencies higher than the fundamental power frequency, such as harmonics. The frequency response of field meters is either narrow-band, broad-band flat response, or broad-band linear response. Typical frequency responses for the three types of meters are shown in Figure 2.

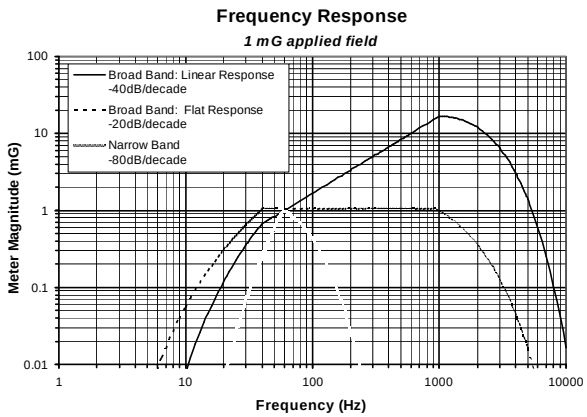

Figure 2. Frequency response of linear broad-band, flat broad-band, and narrow-band magnetic-field meters to a reference field of 1 mG.

A narrow-band meter measures the field magnitude at just the fundamental frequency of interest (60-Hz power frequency in North America). The meter's sensitivity decreases rapidly for frequencies above and below this frequency. A broad-band meter measures the magnitude of the field over some extended frequency range above and below the fundamental frequency of interest, approximately 40 Hz to 1000 Hz in the case of power-frequency fields.

A meter with a flat frequency response will measure the true magnitude of the field throughout its range, without regard to the field's frequency, as illustrated by the middle curve in Figure 2. A meter with a linear frequency response will weight the field magnitude according to the frequency of the field, as shown by the top curve in Figure 2. The meters are calibrated so that a 1-mG field at 60 Hz will read as 1 mG for all three types of frequency response. However, a 1-mG field at 180 Hz (3 times the 60-Hz frequency) will be measured as 3 mG by a meter with a linear frequency response, 1mG by a meter with a flat frequency response, and 0.05 mG by a meter with the narrow-band frequency response illustrated in Figure 2. The frequency response of a meter is an important question in industrial or commercial settings where harmonics are often common.

Harmonic fields of the power system usually occur within the first few harmonics. Except for some specific equipment or certain industrial installations, measuring to 600 Hz (10th harmonic for a 60-Hz power frequency) is usually sufficient to include the field from the fundamental frequency and its harmonics. A typical frequency distribution of the field magnitudes at the power-frequency harmonics from a fluorescent light is shown in Figure 3.

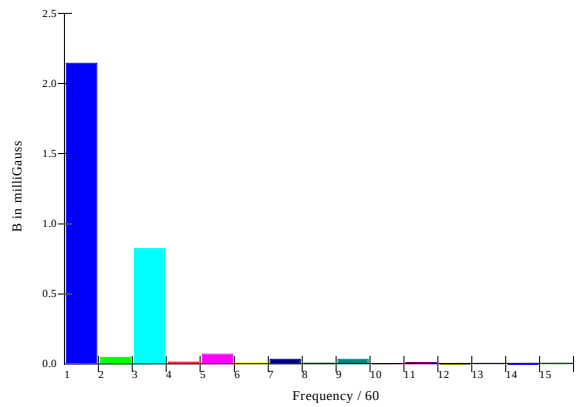

Figure 3. Field magnitude of a fluorescent light at the first 15 harmonics of 60 Hz. The measurements are made with a flat frequency response meter.

Usually the response of meters to frequencies below the power frequency is strongly attenuated in order to minimize the effect of meter movement in the Earth's static magnetic field. The Earth's field is on the order of 500 mG in the United States.

Some meters have frequency ranges down to 5 Hz in order to allow them to meet the MPR Standard [5] for measurements on video display terminals. Meters with extended low-frequency ranges are also necessary to measure the fields from some transportation systems, which have frequencies around 25 Hz. Care must be taken to avoid these meters' movement in Earth's field.

Magnetic-field measurements are not affected by most nearby or grounded objects unless they are ferromagnetic or highly conductive. Because batteries contain ferromagnetic material, they should not be located near the coils of the meter.

Fluxgates are often used for dc magnetic-field measurements or when both dc and ac magnetic fields need to be measured simultaneously to preserve the spatial and temporal relation between the ac and dc magnetic fields. Solid-state Hall Effect sensors are used in some dc (and also some ac) field meters that measure fields of 100 mG or greater.

A review of the effect of meter characteristics on resulting field measurements is provided in Reference 6. The discussion focuses on the impact that field harmonics and polarization have on meter readings.

Electric Field

Most electric-field meters are of the free-body type illustrated in Figure 4. These meters are also known as

split-body meters. The name free-body refers to the fact that the meter must not be grounded or near other objects. Nearby objects will perturb the meter's measurement of the electric field. The meter is generally supported by a dielectric rod or tripod. It determines the electric field due to the induced current flowing between two isolated surfaces. The free-body meter is self-contained, portable, and does not require a known ground reference. Since the user must be away from the meter to avoid perturbing the measurement, the meter is large enough to read at a distance.

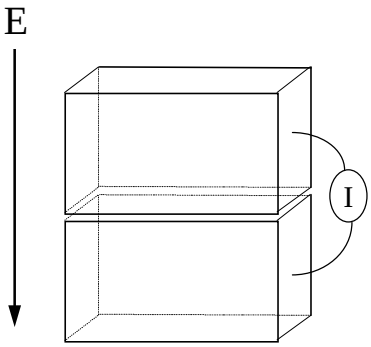

Figure 4. Free-body electric-field meter.

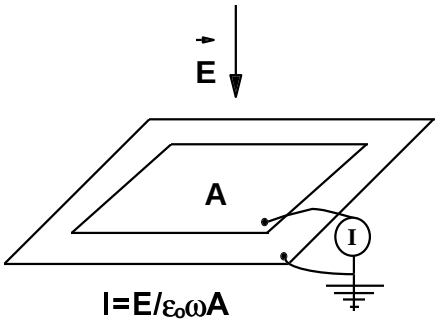

Figure 5. Ground reference electric-field meter.

A second method of determining the electric field is to measure the current induced on a surface, as illustrated in Figure 5. This "ground reference" method is often used in electric-field personal-exposure meters or for monitoring of the electric field at fixed locations such as near ground level under a power line.

Standards and Guidelines

Some investigators have developed guidelines and standards to describe the performance and use of the meters [1,2,3,4]. Others have compared various meters [7,8,9]. RAPID Engineering Project #1 provides lists of the various instrument types [10] and discusses their performance; RAPID Engineering Projects #1, #2, and #4 also discuss the relative merits of the instruments for use in different measurement situations [10,11,12].

III INSTRUMENTATION

Magnetic-field Instrumentation

The variety of magnetic-field meters for power-frequency-related measurements can be grouped into four broad categories:

Survey meters	Exposure meters
Recording meters	Waveform recorders.

Survey Meters

A survey meter is usually hand-held and produces an rms reading of the field magnitude along either a single axis or three orthogonal axes. If three axes are measured, the resultant field (total rms field) is often displayed alone or with the readings from the three individual axes. A direct determination of the harmonic field is usually not possible with most survey meters. Some meters may provide a measure of the third harmonic field, Total Harmonic Distortion (THD), or allow switching between "narrow band" and "broad band" response or between "flat" and "linear" frequency response in order to indicate whether harmonics are contributing to the field. The frequency response of these meters generally ranges from a few Hertz (to accommodate the Swedish MPR II VDT measurement standard) to a kilohertz or less.

Recording Meters

A recording meter usually measures the rms field (either broad-band or narrow-band) along all three axes, determines the resultant field, and periodically stores all or part of this information at time-stamped intervals. Additional information may also be recorded by the meter such as spatial positioning (mapping data), current, or electric field, depending on various additional pieces of equipment that may be connected to the recorder. The data stored in the meter can be downloaded to a computer for long-term storage, analysis, and plotting of spatial maps or time histories. These recorders are generally hand-held size or smaller and relatively easy to use. They are often used as survey meters or exposure meters.

Some recording meters attach a distance-measuring wheel to allow spatial information to be recorded, along with the field magnitude. The meter can record the distance based on fixed intervals of distance, where the measuring wheel is triggering the measurement recording, or on time intervals, where the meter records the field and distance traveled during fixed time intervals. In either case, a slow steady pace results in better measurements.

Exposure Meters

Magnetic-field exposure meters are generally small devices, without a display, that are pocket-sized or smaller. As technology has developed, so has the sophistication of these exposure meters. Early versions used a simple accumulator with either a single sensing coil or three orthogonal coils [13]. The device was essentially a dosimeter, providing information only on the total "dose" of magnetic field in milligauss-hours; thus, 1 hour at 100 mG provided the same reading as 100 hours at 1 mG. This information provides a simple time-weighted average (TWA) over the measurement period.

Other versions of exposure meters assigned periodically measured field levels to appropriate bins and stored the total count [14,15]. A recent variation of this method stores the statistics of the measured field such as the mean, minimum, maximum, and standard deviation, as well as assigning the field level to a bin [16].

Waveform Recorders

Waveform recorders are much more complex than recording magnetic-field meters. Only a few waveform recorders are available and they vary in size and complexity. Most waveform recorders are now portable, with a hand-held sensor attached to a belt-pouch or backpack containing the recording system. Waveform recorders are broad-band devices. Depending on the device and sensors, the frequency range may be from approximately 10 Hz to 1000 Hz or from DC to 3000 Hz. Both single-axis and three-axis waveform recorders are available.

A three-axis waveform recorder allows easy determination of the polarization and orientation of the magnetic field and its power-frequency harmonics. If fluxgate magnetic-field sensors are used, both the ac and dc magnetic field can be measured simultaneously, allowing the orientation and temporal relation between the ac and dc magnetic field to be determined. Information from additional sensors, such as electric field, current, voltage, and VLF and LF rms levels, can be recorded by some waveform capture systems [17].

Waveform capture systems collect a large volume of data for each wave capture. The amount of data can easily exceed several megabytes of information per day. Storing, analyzing, displaying, and interpreting the large volume of data can be difficult.

Transients

Instruments to measure transient magnetic fields include a survey meter (peak increment of field magnitude, ΔB; or peak rate of change of the field, dB/dt), an exposure meter (dB/dt above a threshold), and a waveform capture system [16,18]. Although the survey meter and exposure assessment meter are portable, detailed information on the transient is not available. Detailed information on the transient is recorded with the waveform capture system. The system is large and, although transportable, is intended for use at fixed locations.

Electric-field Instrumentation

Survey Meter

Survey meters are generally single-axis free-body meters. The free-body meter is easily affected by nearby objects, including the user. The presence of nearby objects and the reader must be considered when taking measurements. The meter is usually read at a distance and the measurements recorded manually.

Free-Body Electric-field Meter: Fiber-optic Link

A fiber-optic link can be added to a free-body meter to allow its output to be recorded. The free-body sensor can also be connected to a waveform-capture system through a fiber-optic link, allowing the electric-field waveform to be recorded. Using a fiber-optic link allows the free-body sensor to be small and the user distant so that the sensor can be used to measure the electric fields in a variety of settings. The electric field in exposure systems can be measured using a fiber-optic free-body sensor.

Exposure Meter

Personal-exposure meters for the electric field have been made. An early version consisted of a small electric plate mounted on the surface of the body. A simple accumulator was used [19] to integrate the electric-field exposure in volts/meter - seconds from which a TWA exposure could be calculated. Other versions of the electric-field exposure meter store the accumulated time at various bins of electric-field strengths [15] or the actual time history of field-strength bins [14]. A special sensor jacket with recorder has also been used to measure the actual time history of electric-field exposure [20].

IV MEASUREMENT METHODS AND INSTRUMENTATION CHOICE

The type of field instrumentation used for a particular set of measurements or study will depend on the quantities that the investigator wishes to measure and the constraints imposed by the site or study. A discussion of the choice of instrumentation for measurement objectives is provided in RAPID Engineering Projects #1, #2, and #4 [10,11,12].

A number of general and specific measurement protocols have been developed [1,4,17,21,22]. Measurement protocols have been developed by the

RAPID engineering program for personal-exposure assessment studies, for magnetic-field source identification, and for environment-specific settings [10,11,12]. The choice of appropriate instrumentation for these measurements is described.

V INSTRUMENTATION IMPLICATIONS

A variety of instruments are now available that are capable of measuring the magnitude of the magnetic field in the range from approximately 0.1mG to 1G and to even higher levels, if desired. Many meters provide information on the magnitude of the field in the power-frequency and harmonic range by providing separate readings of the field intensity at just the power frequency and some other measure that includes the harmonic-field contribution, such as the harmonic-field contribution between approximately 100 Hz and 1000 Hz, the harmonic-field contribution for specific harmonics, or as the total power-frequency field and its harmonics. Information on the polarization of the magnetic field can be obtained by using two three-axis meters simultaneously at the same location, but this is difficult and is seldom done. Detailed frequency and polarization information is usually obtained by using a three-axis waveform capture system.

The frequency response of a meter may have a strong impact on the measured field if there are harmonics present. A meter with a broad-band linear response will give extra weight to a field, depending on its frequency, while a broad-band meter with a flat response will measure fields at all frequencies equally. A narrow-band meter will not respond to any of the harmonic fields, and will measure only the fundamental frequency. The frequency response of a meter or at least its identity should always be noted. This has not always been done in measurement reports.

Much of the EMF instrumentation development has been driven by interest in measuring the magnetic or electric field. The measurement technology has developed as exposure studies were occurring. As a result, field data obtained in some early studies may not have the same quality or accuracy as data in later studies.

Meters that work fine in a controlled test setting with a typical range of fields may lose accuracy at low fields or high fields. As an example, the accuracy at fields below approximately 10 mG for some simple single-axis magnetic-field sensors depended on the digital volt meter that was used with them. A Fluke digital volt meter used with the sensors was accurate for fields less than a milligauss, while some other volt meters would read only a half or a third of the actual field in the 1-to-5 mG range.

Meters are sometimes used in environments where fields may exceed the measurement range, in magnitude or frequency, of the instrument. As a result, the fields may be either under-read or ignored by the meter (or user).

External fields such as high electric fields or electromagnetic interference from hand-held communication devices have been known to affect meters, resulting in high readings.

Motion of the meters in the Earth's field can produce errors in the measurements. The error amount will depend on the rapidity of the movement and the low-frequency sensitivity of the meter. Meter readings during rapid walking or bouncing may be of concern.

Placement of magnetic-field meters near shielding, conductive, or ferromagnetic objects, or unknown magnetic-field sources can affect the meter readings. Early measurement protocols may not have recognized this problem.

Measurements with a meter can be taken in many ways. The protocol used for measurements can be as significant as the meter characteristics on the resulting measured field. As example, the field for a house could be measured only at the front door or it could be measured at the center of each room and the measurements averaged. The two measurement protocols might agree for some houses, while for houses with significant current on their plumbing, the first method might yield only 1 mG, and the second method 5mG.

Key Questions:

1. What is being measured, *and not measured*, by the instrumentation and measurement protocols in various settings?
2. What are the major limitations of present instrumentation and measurement technology *(accuracy, reliability, convenience, lack of reporting instrument characteristics, lack of reporting measurement protocol)?*
3. How can limitations and concerns with meters and measurement protocols be recognized?
4. Will these limitations and concerns have a significant effect on the overall conclusions of a study?

VI REFERENCES

1. ANSI/IEEE Standard 644-1994. *IEEE Standard Procedures for Measurement of Power Frequency Electric and Magnetic Fields from AC Power Lines*, Institute of Electrical and Electronic Engineers, Inc. New York, NY, 1994.

2. IEEE Standard 1308 - 1994, *IEEE Recommended Practice for Instrumentation: Specifications for Magnetic Flux Density and Electric Field Strength Meters - 10 Hz to 3 kHz*, Institute of Electrical and Electronic Engineers, Inc. New York, NY, 1994.
3. IEEE AC Fields Working Group, "Measurements of Power Frequency Magnetic Fields Away from Power Lines," *IEEE Transactions on Power Delivery*, PWRD-6, 1991.
4. IEEE AC Fields Working Group, "A Protocol for Spot Measurements of Residential Power Frequency Magnetic Fields," *IEEE Transactions on Power Delivery*, PWRD-8, 1993.
5. MPR, *Test Methods for Visual Display Units*, MPR 1990:8-12-01, 1990.
6. Sicree, R.M., Rauch, G.B., Dietrich, F.M., "Comparison of Magnetic Flux Density Meter Responses Over A Database of Residential Measurements," *IEEE Transactions on Power Delivery*, PWRD-8, 1993.
7. EPA, *Laboratory Testing of Commercially Available Power Frequency Magnetic Field Survey Meters*, EPA Report 400R-92-010, Environmental Protection Agency, Washington, DC, 1991.
8. IEEE AC Fields Working Group, "An Evaluation of Instrumentation Used to Measure AC Power System Magnetic Fields," *IEEE Transactions on Power Delivery*, PWRD-6, #1, pp. 373-383, 1991.
9. Bracken, T.D., *Comparison of Electrical Field Exposure Monitoring Instrumentation*, EPRI EA-4085, Final Report, June 1985, Electric Power Research Institute, Palo Alto, CA, 1985.
10. Electric Research and Management, Inc., *Development of Recommendations for Guidelines for Field Source Measurement*, EMF RAPID Program Engineering Projects - Project #1, Task A, pp. 44-58. Prepared for Oak Ridge National Laboratory EMF Research Program. U.S. Department of Energy, 1997.
11. Bittner, P. *Recommendations for Guidelines for Environment Specific Magnetic Field Measurements*, EMF RAPID Program Engineering Projects - Project #2, Section 2, pp. 2.16-2.27. Prepared by Magnetic Measurements for Oak Ridge National Laboratory EMF Research Program. U.S. Department of Energy, 1997.
12. Bracken, T.D., Rankin, R.F., Wiley, J.F., Bittner, P. *Recommendations for Guidelines for EMF Personal Exposure Measurements*, EMF RAPID Program Engineering Projects - Project #4, Section 2, pp. 2.7-2.21. Prepared by T.D. Bracken, Inc. for Oak Ridge National Laboratory EMF Research Program, U.S. Department of Energy, 1997.
13. Kaune, W.T, Niple, J.C., Liu, M.J., Silva, J.M., "Small Integrating Meter for Assessing Long-term Exposure to Magnetic Fields," *Bioelectromagnetics*, Vol. 13, pp. 413-427, 1992.
14. Heroux, P. "A Dosimeter for Assessment of Exposures to ELF Fields," *Bioelectromagnetics*, Vol. 12, #4, pp. 241-257, 1991.
15. Chartier, V.L., Bracken, T.D., "Occupational Exposure of High Voltage Workers to 60Hz Electric Fields, Part 1: Exposure Instrumentation," *Interaction of Biological Systems with Static and ELF Electric and Magnetic Field*, Anderson, Kelman, Weigel: Editors, 23rd Hanford Life Sciences Symposium, pp. 125-134, Pacific Northwest Laboratory, Richland, WA, 1987.
16. Enertech Consultants, Campbell, CA. Personal communication on exposure meters and transient meter, March 20 & 24, 1998.
17. Rauch, G., Chang, M. Keller, and T.D. Bracken, *Protocol for Measurement of Transmission and Distribution Line Workplace Magnetic Fields by Waveform Capture*, Proceedings of the IEEE/PES Transmission and Distribution Conference, Chicago, IL, April, 1994, New York, NY, 1994.
18. Guttman, J.L., L.E. Zaffanella, G.B. Johnson, *Survey Measurements and Experimental Studies of Residential Transient Magnetic Fields*, EPRI TR-104532, Interim Report, December 1994, Electric Power Research Institute, Palo Alto, CA, 1994.
19. Deno, D.W, "Monitoring of Personnel Exposed to a 60Hz Electric Field," *Biological Effects Extremely Low Frequency Electromagnetic Fields*, Phillips: Editor, 18th Hanford Life Sciences Symposium, Technical Information Center, Springfield, VA, 1979.
20. Deno, D.W., and J.M. Silva, "Method for Evaluating Human Exposure to 60 Hz Electric Fields," *IEEE Transactions on Power Apparatus and Systems*, Vol. 103, #7, pp. 1699-1706, 1984.
21. Pacific Gas & Electric, *PG&E Magnetic Field Measurement Protocol for Schools*, San Francisco, CA, March 1992.
22. Zaffanella, L.E., *Survey of Residential Magnetic Field Sources*, EPRI TR-102759, Final Report, September 1993, EPRI, Palo Alto, CA, 1993.